DRAWING NO XRL/G47/0010/1

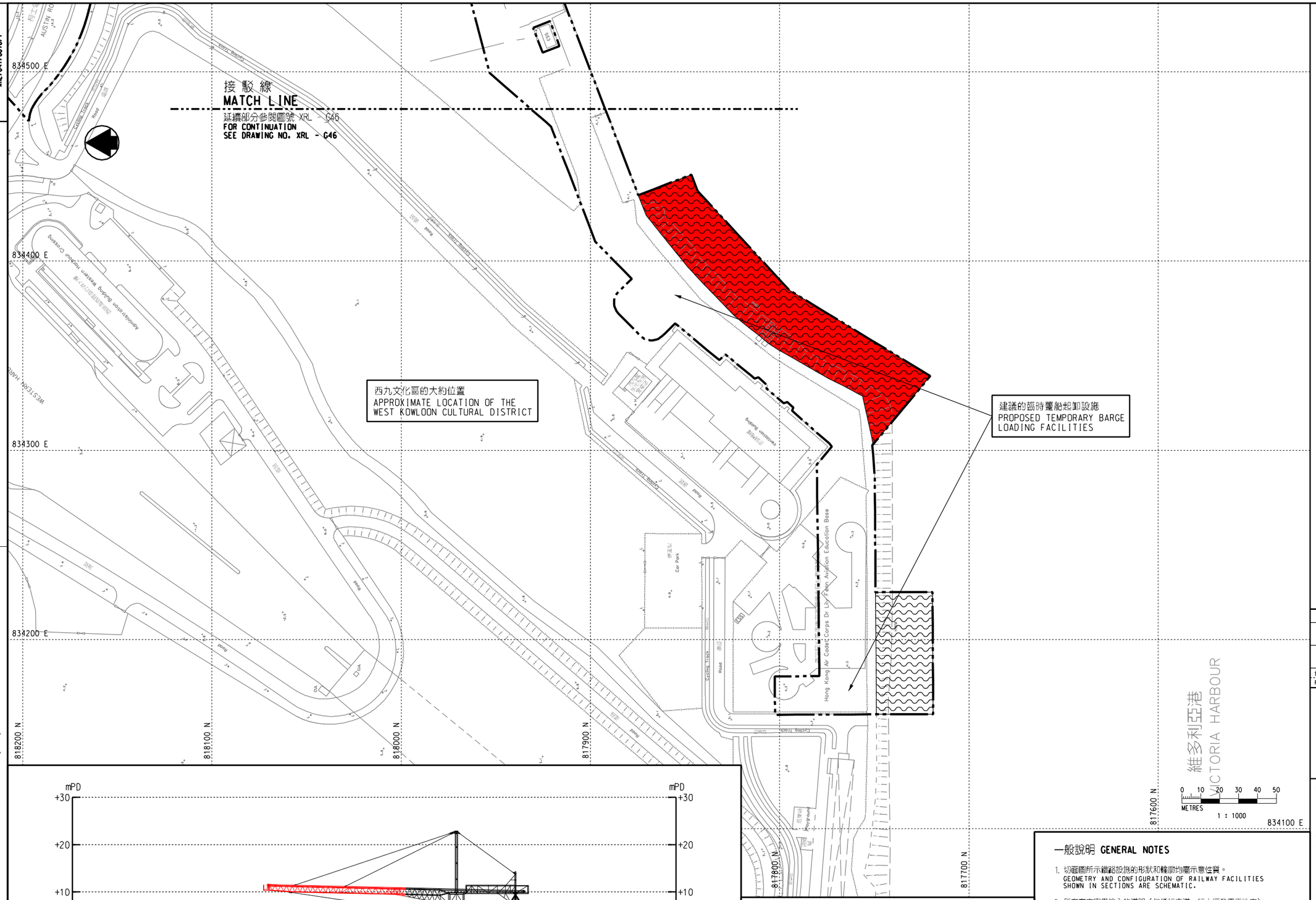

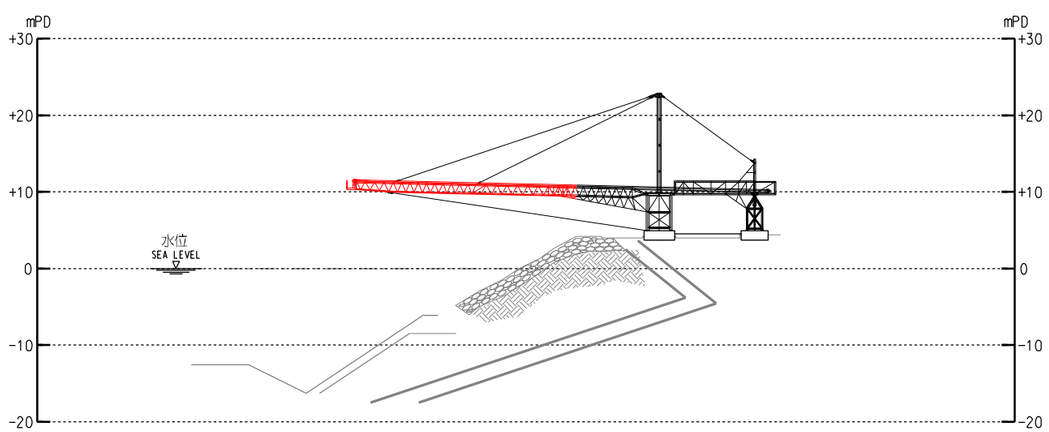

躉船起卸台的典型切面圖 **TYPICAL SECTION OF BARGE LOADING RAMP**

不按比例 NOT TO SCALE

說明 NOTES

此圖根據第XRL-G47號(修改1)圖則制訂，以紅色標明在西九文化區對開維多利亞港範圍內的受影響政府前濱及海床，並標示西九文化區的大約位置及加插切面圖以作參考。

THIS DRAWING IS PREPARED BASED ON DRAWING NO. XRL-G47 (REVISION 1) AND IS INTENDED TO SHOW THE GOVERNMENT FORESHORE AND SEA-BED (HIGHLIGHTED IN RED) OF AN AREA OF VICTORIA HARBOUR OFF THE WEST KOWLOON CULTURAL DISTRICT (WKCD) TO BE AFFECTED. AN APPROXIMATE LOCATION OF THE WKCD AND A SECTION DRAWING ARE ADDED FOR REFERENCE PURPOSE.

一般說明 GENERAL NOTES

1. 切面圖所示鐵路設施的形狀和輪廓均屬示意性質。
   GEOMETRY AND CONFIGURATION OF RAILWAY FACILITIES SHOWN IN SECTIONS ARE SCHEMATIC.
2. 所有在方案界線內的道路（包括行車道、行人徑及露天地方），無論有否在圖則中顯示，都有可能會永久或暫時封閉或大幅改動。
   ALL ROADS INCLUDING CARRIAGEWAYS, FOOTPATHS AND OPEN PLACES WITHIN THE BOUNDARY OF THE SCHEME, WHETHER OR NOT SHOWN ON THE DRAWINGS MAY BE CLOSED OR ALTERED SUBSTANTIALLY ON A PERMANENT OR TEMPORARY BASIS.
3. 除非圖則中特別註明，否則在方案界線內，或與方案界線毗鄰的所有建築物的汽車通道及行人通道，包括逃生路徑，將會保留。
   UNLESS NOTED OTHERWISE ON THE DRAWINGS, VEHICULAR AND PEDESTRIAN ACCESSES INCLUDING MEANS OF ESCAPE TO AND FROM ALL BUILDINGS WITHIN OR ADJACENT TO THE BOUNDARY OF THE SCHEME ARE TO BE MAINTAINED.
4. 所有水平均為約數，以米為單位，並高於香港的主水平基準。
   ALL LEVELS ARE APPROXIMATE AND IN METRES ABOVE HONG KONG PRINCIPAL DATUM (mPD).
5. 圖則顯示的建造方法分界線只是大概位置，有關界線可因應當時的地盤情況而作出改動。
   BOUNDARIES SHOWN ON DRAWINGS FOR THE CONSTRUCTION METHODS TO BE CARRIED OUT ARE APPROXIMATE ONLY. THESE BOUNDARIES MAY BE ALTERED ON SITE TO SUIT PREVAILING SITE CONDITIONS.

圖例 LEGEND

- 方案界線 BOUNDARY OF THE SCHEME
- 擬建的車站及其他鐵路設施 PROPOSED STATION AND OTHER RAILWAY FACILITIES
- 擬建的車站及其他鐵路設施(地下) PROPOSED STATION AND OTHER RAILWAY FACILITIES (UNDERGROUND)
- 擬建的鑽挖或挖掘或鑽爆隧道 PROPOSED BORED / MINED / DRILL AND BLAST TUNNEL
- 擬採用明挖回填法興建的鐵路設施或隧道 PROPOSED RAILWAY FACILITIES/TUNNEL BY CUT-AND-COVER METHOD
- 擬建的地下臨時建築通道 PROPOSED TEMPORARY UNDERGROUND CONSTRUCTION ACCESS
- 可能永久封閉的道路（包括行車道和行人徑） ROADS (INCLUDING CARRIAGEWAY AND FOOTPATH) WHICH MAY BE CLOSED PERMANENTLY
- 擬建的緊急車輛通道及行車道 PROPOSED EMERGENCY VEHICULAR ACCESS AND CARRIAGEWAY
- 擬建的行人徑 PROPOSED FOOTPATH
- 現有的行人天橋將受影響 EXISTING FOOTBRIDGE TO BE AFFECTED
- 擬建的臨時行人天橋/地面行人過路處 PROPOSED TEMPORARY FOOTBRIDGE / AT-GRADE PEDESTRIAN CROSSING
- 擬建的行人天橋 PROPOSED FOOTBRIDGE
- 可能在其上進行填海工程或其他工程的政府前濱或海床 GOVERNMENT FORESHORE OR SEABED OVER OR UPON WHICH RECLAMATION OR OTHER WORKS MAY BE CARRIED OUT
- 1 圖則修改 DRAWING REVISION
- A1 修訂參考編號(參考憲報公告) AMENDMENT REFERENCE NUMBER (SEE GAZETTE NOTICE)
- 修訂範圍 AMENDMENT AREA

修訂表 TABLE OF AMENDMENTS

修改 REV	日期 DATE	繪圖 BY	核對 SUB	負責 APP	說明 DESCRIPTION

SIGNED

陳彩偉 CHAN CHOI WAI

獲准發出 APPROVED FOR ISSUE

路政署 鐵路拓展處總工程師(2-3) CHIEF ENGINEER/ RAILWAY DEVELOPMENT (2-3) HIGHWAYS DEPARTMENT

17/5/2011

發出日期 DATE OF ISSUE

圖則名稱 DRAWING TITLE

鐵路條例（第519章）
廣深港高速鐵路香港段
在西九文化區對開維多利亞港範圍內的政府前濱及海床及其上進行工程
RAILWAYS ORDINANCE (CHAPTER 519)
HONG KONG SECTION OF
GUANGZHOU - SHENZHEN - HONG KONG
EXPRESS RAIL LINK
WORKS OVER AND UPON THE GOVERNMENT FORESHORE AND SEA-BED AT VICTORIA HARBOUR OFF THE WEST KOWLOON CULTURAL DISTRICT

圖號 DRAWING NO. XRL/G47/0010/1

比例 SCALE 1:1000 (A1) 或如圖示 OR AS SHOWN

香港特別行政區政府
THE GOVERNMENT OF THE HONG KONG SPECIAL ADMINISTRATIVE REGION
路政署
HIGHWAYS DEPARTMENT
鐵路拓展處
RAILWAY DEVELOPMENT OFFICE

UserWorkspace C:\Program Files\Bentley\V8i\Workspace\users\XRL_landrdo.ucf, UserRef C:\Program Files\Bentley\V8i\Workspace\projects\untitled.pcf
FILE NAME: X:\CEPA\XRL\Project\G08_0094_admin\Rail\XRL_G2_Clear_A3.pcf
PLOT DATE: 17/05/11 10:41:00 AM
PRINTED BY: ac50198