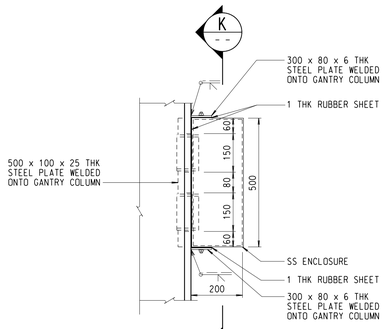

DETAIL 6 (158(1))

SCALE 1:10

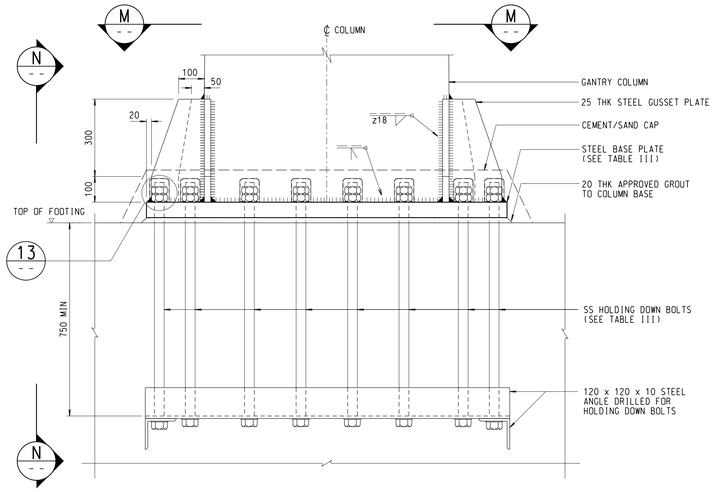

TYPICAL CONNECTION OF GANTRY COLUMN TO FOUNDATION

SCALE 1:10

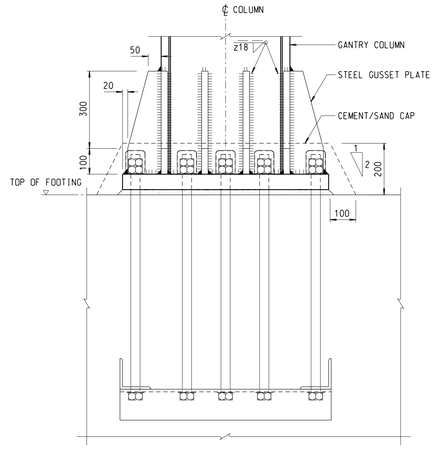

ELEVATION N

SCALE 1:10

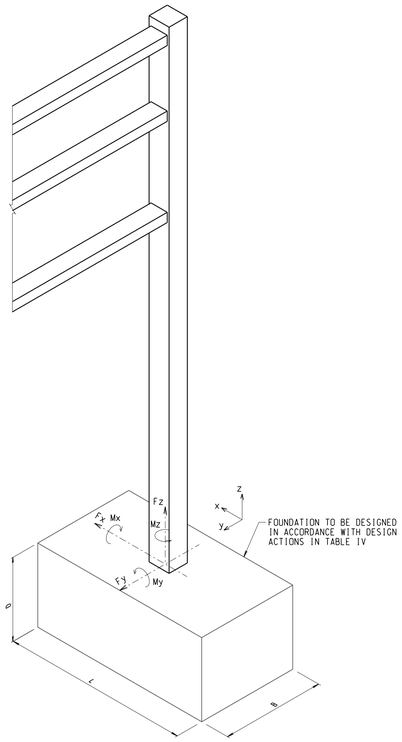

ISOMETRIC VIEW

DIAGRAMMATIC

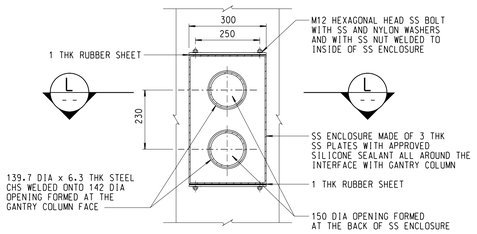

SECTION K

SCALE 1:10

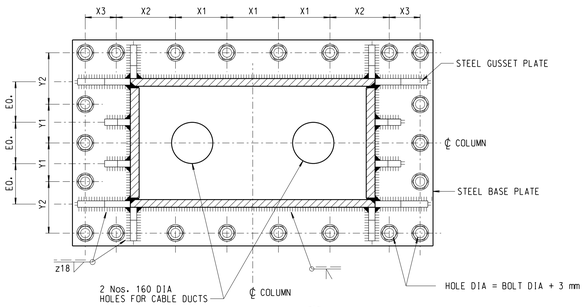

SECTION M

SCALE 1:10

(CEMENT/SAND CAP AND PLASTIC CAP NOT SHOWN FOR CLARITY)

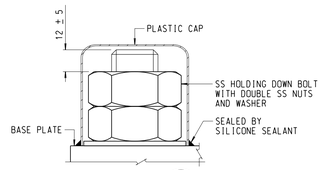

DETAIL 13

SCALE 1:2

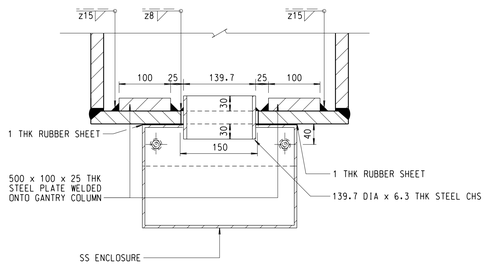

SECTION L

SCALE 1:5

TABLE III - GANTRY COLUMN AND ANCHORAGE DETAILS

GANTRY SPAN (S) (mm)	COLUMN WIDTH		BASE PLATE (mm)	HOLDING DOWN BOLTS						
	W1 (mm)	W2* (mm)		SIZE	No.	X1 (mm)	X2 (mm)	X3 (mm)	Y1 (mm)	Y2 (mm)
S ⩽ 13000	500	750	1150 x 750 x 55 THK	M36	22	180	155	100	150	175
13000 < S ⩽ 17000	500	850	1250 x 800 x 60 THK	M36	22	200	175	100	150	200
17000 < S ⩽ 22000	500	950	1400 x 800 x 60 THK	M36	22	200	230	120	150	200

TABLE IV - UNFACTORED DESIGN ACTIONS AT BASE OF GANTRY COLUMNS

GANTRY SPAN (S) (mm)	FORCE (kN)			MOMENT (kNm)			SUGGESTED FOOTING SIZES (mm)		
	Fx	Fy	Fz	Mx	My	Mz	L	B	D
S ⩽ 13000	490	230	240	570	1410	180	5500	3000	2000
13000 < S ⩽ 17000	500	250	290	740	1690	330	6000	3000	2000
17000 < S ⩽ 22000	500	270	330	830	1790	490	6000	3000	2000

NOTES:

1. A WIND PRESSURE OF 3.3 kN/m² HAS BEEN ADOPTED IN THE DESIGN.
2. DEFINITION OF FORCES AND MOMENTS SEE ISOMETRIC VIEW.
3. SUGGESTED FOOTING SIZES ARE GIVEN FOR REFERENCE ONLY. SEPARATE DESIGN OF FOUNDATION SHALL BE PROVIDED TO SUIT SITE CONDITIONS.
4. DESIGN OF REINFORCED CONCRETE SHALL COMPLY WITH THE STRUCTURES DESIGN MANUAL FOR HIGHWAYS AND RAILWAYS (2013).

NOTES:

1. THIS DRAWING SHALL BE READ IN CONJUNCTION WITH DRAWING No. SSD158(1).

no.	date	description	initial
A	11/16	DRAWING LAYOUT REARRANGED; COLUMN BASE CONNECTION DETAIL AND TABLE IV REVISED	SIGNED C.P.WONG, E/P2-3; SIGNED P.T. LEUNG, SE/P2

REVISION

		name	signature	date
designed		K. S. LAM	SIGNED	04/11
drawn		W. K. WOO	SIGNED	04/11
checked	senior technical officer	Y. W. CHIN	SIGNED	08/11
checked	project engineer	K. S. LAM	SIGNED	08/11
checked	senior engineer	P. T. LEUNG	SIGNED	08/11

approved

SIGNED — P. K. LEE, Chief Highway Engineer — 05/08/2011 (date)

contract no.

file no. STR 5/40/18

project no.

contract

drawing title

TRAFFIC CONTROL AND SURVEILLANCE SYSTEM
SIGN GANTRY TYPE C
FOR FULLY VARIABLE MESSAGE SIGN WITH LANE CONTROL SIGNAL AND OPTIONAL VARIABLE SPEED LIMIT SIGN
(SHEET 3 OF 4)

drawing no. SSD158(3)-A

scale AS SHOWN

office

BRIDGES AND STRUCTURES DIVISION 結構樑及構件部

HIGHWAYS DEPARTMENT 香港路政署
HONG KONG

0 10 20 30 40 50 mm
1 : 1 SCALE BAR

B1 SIZE 1000 X 707mm