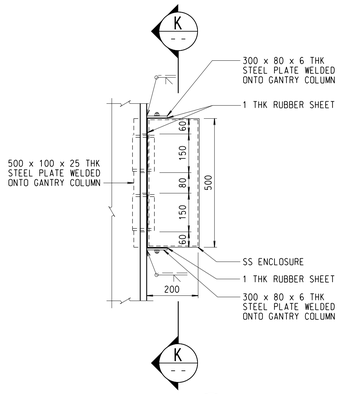

DETAIL 5 / 157(1)

SCALE 1:10

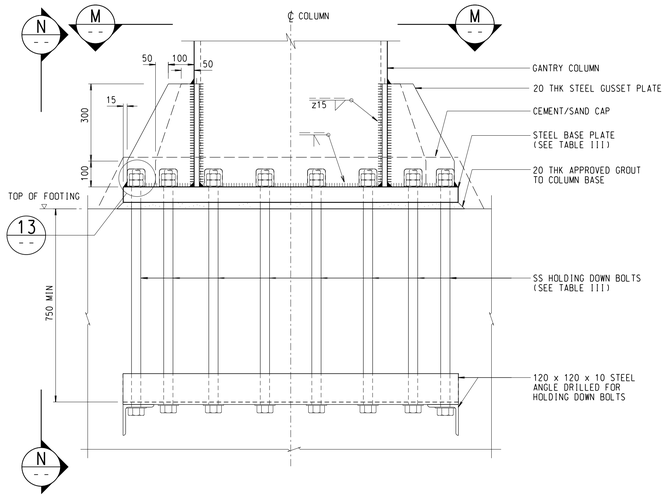

TYPICAL CONNECTION OF GANTRY COLUMN TO FOUNDATION

SCALE 1:10

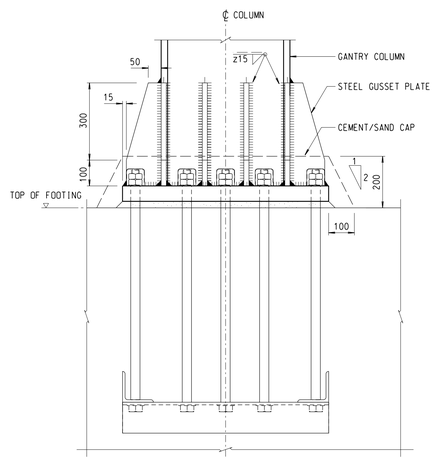

ELEVATION N / --

SCALE 1:10

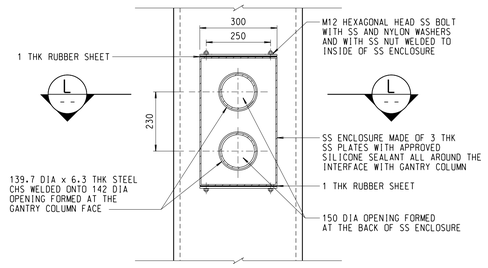

SECTION K / --

SCALE 1:10

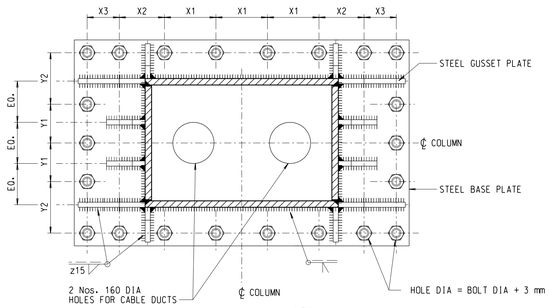

SECTION M / --

SCALE 1:10

(CEMENT/SAND CAP AND PLASTIC CAP NOT SHOWN FOR CLARITY)

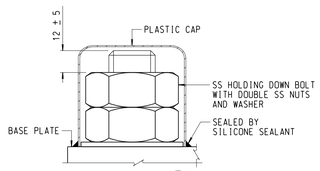

DETAIL 13 / --

SCALE 1:2

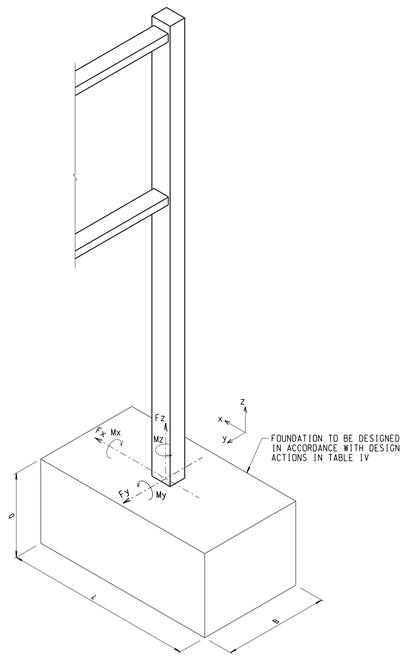

ISOMETRIC VIEW

DIAGRAMMATIC

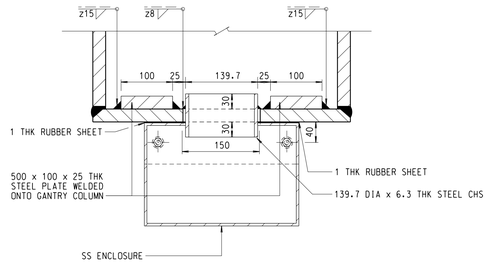

SECTION L / --

SCALE 1:5

TABLE III - GANTRY COLUMN AND ANCHORAGE DETAILS

GANTRY SPAN (S) (mm)	COLUMN WIDTH		BASE PLATE (mm)	HOLDING DOWN BOLTS						
	W1 (mm)	W2* (mm)		SIZE	No.	X1 (mm)	X2 (mm)	X3 (mm)	Y1 (mm)	Y2 (mm)
S ≤ 13000	500	600	1150 x 750 x 55 THK	M30	22	140	190	125	150	175
13000 < S ≤ 17000	500	700	1250 x 800 x 60 THK	M30	22	190	165	125	150	200
17000 < S ≤ 22000	500	750	1300 x 800 x 60 THK	M36	22	200	175	125	150	200

TABLE IV - UNFACTORED DESIGN ACTIONS AT BASE OF GANTRY COLUMNS

GANTRY SPAN (S) (mm)	FORCE (kN)			MOMENT (kNm)			SUGGESTED FOOTING SIZES (mm)		
	Fx	Fy	Fz	Mx	My	Mz	L	B	D
S ≤ 13000	490	230	150	550	1380	110	5500	3000	2000
13000 < S ≤ 17000	500	240	180	590	1430	230	5500	3000	2000
17000 < S ≤ 22000	500	260	210	620	1440	320	5500	3000	2000

NOTES:

1. A WIND PRESSURE OF 3.3 kN/m² HAS BEEN ADOPTED IN THE DESIGN.
2. DEFINITION OF FORCES AND MOMENTS SEE ISOMETRIC VIEW.
3. SUGGESTED FOOTING SIZES ARE GIVEN FOR REFERENCE ONLY. SEPARATE DESIGN OF FOUNDATION SHALL BE PROVIDED TO SUIT SITE CONDITIONS.
4. DESIGN OF REINFORCED CONCRETE SHALL COMPLY WITH THE STRUCTURES DESIGN MANUAL FOR HIGHWAYS AND RAILWAYS (2013).

NOTES:

1. THIS DRAWING SHALL BE READ IN CONJUNCTION WITH DRAWING No. SSD157(1).

no.	date	description	initial
A	11/16	DRAWING LAYOUT REARRANGED; COLUMN BASE CONNECTION DETAIL AND TABLE IV REVISED	SIGNED C.P.WONG, E/P2-3; SIGNED P.T. LEUNG, SE/P2

REVISION

	name	signature	date
designed	K. S. LAM	SIGNED	04/11
drawn	W. K. WOO	SIGNED	04/11
checked: senior technical officer	Y. W. CHIN	SIGNED	08/11
checked: project engineer	K. S. LAM	SIGNED	08/11
checked: senior engineer	P. T. LEUNG	SIGNED	08/11

approved

SIGNED — P. K. LEE, Chief Highway Engineer — 05/08/2011 (date)

contract no.

file no. STR 5/40/18

project no.

contract

drawing title

TRAFFIC CONTROL AND SURVEILLANCE SYSTEM
SIGN GANTRY TYPE B

FOR FULLY VARIABLE MESSAGE SIGN

(SHEET 3 OF 4)

drawing no. SSD157(3)-A

scale AS SHOWN

office BRIDGES AND STRUCTURES DIVISION 結構樑及構部

HIGHWAYS DEPARTMENT HONG KONG 香港路政署

0 10 20 30 40 50 mm
1 : 1 SCALE BAR

B1 SIZE 1000 X 707mm