NOTES:

1. ALL DIMENSIONS ARE IN MILLIMETRES.
2. DETAILS AND THICKNESS OF ALL WELDS SHALL BE APPROVED BY THE ENGINEER.

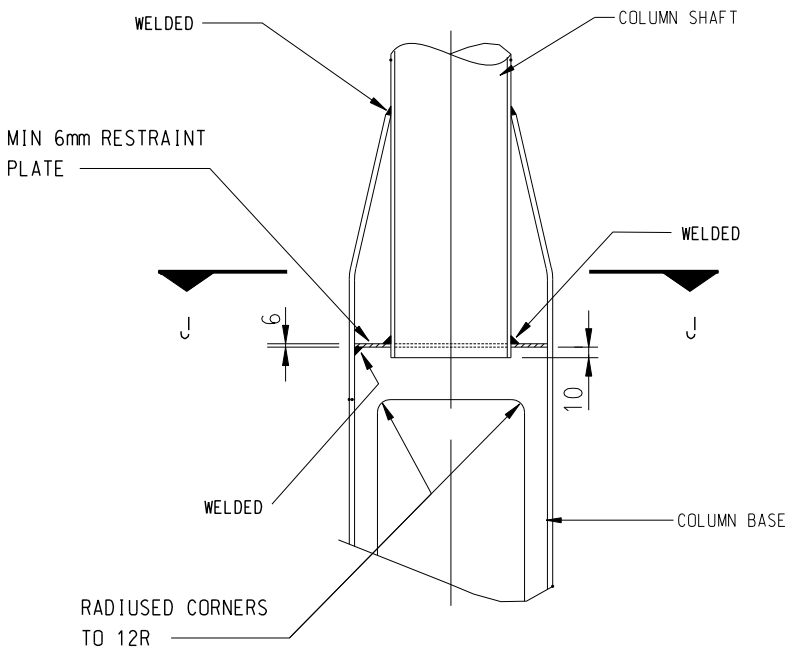

TYPICAL SWAGED DETAIL

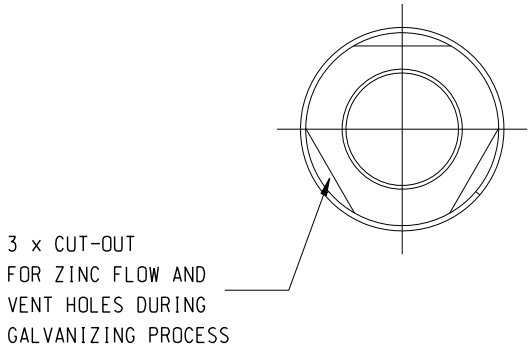

SECTION J-J

REF.	REVISION	SIGNATURE	DATE
	Former Drg. No. LDSDGE01-CL0012A with general revision		AUG 14

SHAFT/BASE CONNECTION DETAIL OF LIGHTING COLUMN

HIGHWAYS DEPARTMENT
LIGHTING DIVISION

REFERENCE	DRAWING No.	CAD
SCALE N.T.S.	HLDSDGE01-CL0012	