NOTES:

1. ALL DIMENSIONS ARE IN MILLIMETERS.
2. THE BRACKET PROJECTION LENGTH AND THE TILTING ANGLE OF LANTERN SHALL BE SPECIFIED BY THE ENGINEER.
3. STEEL GRADE OF AT LEAST Q345 COMPLYING WITH GB/T700 SHALL BE USED FOR THE BRACKET. ALL STEEL SHALL BE APPLIED WITH SURFACE TREATMENT SAME AS THE LIGHTING COLUMN WHERE THE BRACKET IS INSTALLED. THE COLOUR OF BRACKET SHALL BE SPECIFIED BY THE ENGINEER.
4. FOR NON-SPECIFIED DIMENSIONS, RELEVANT APPROVAL BY THE ENGINEER SHALL BE SOUGHT.

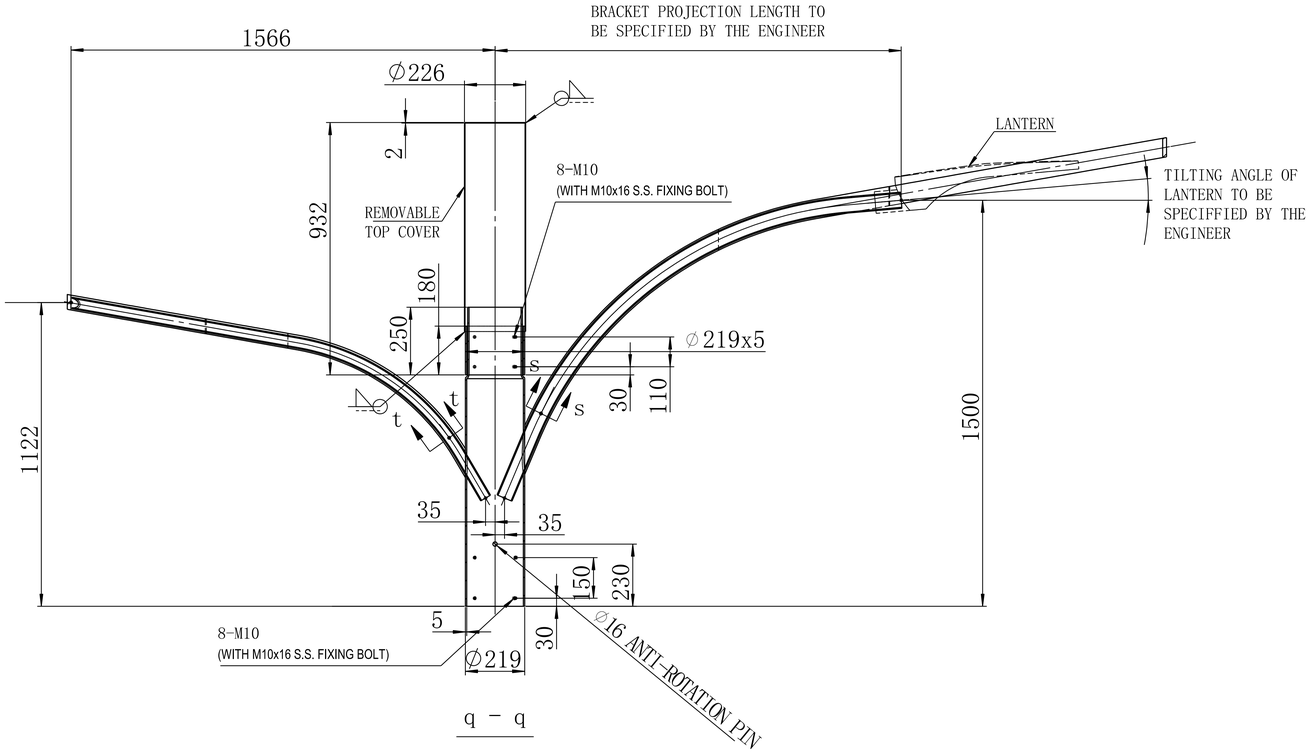

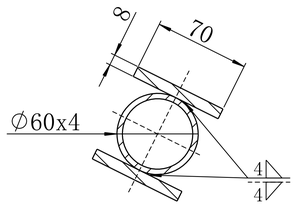

s - s

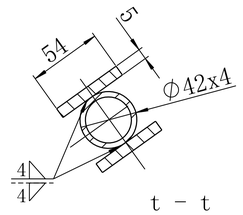

t - t

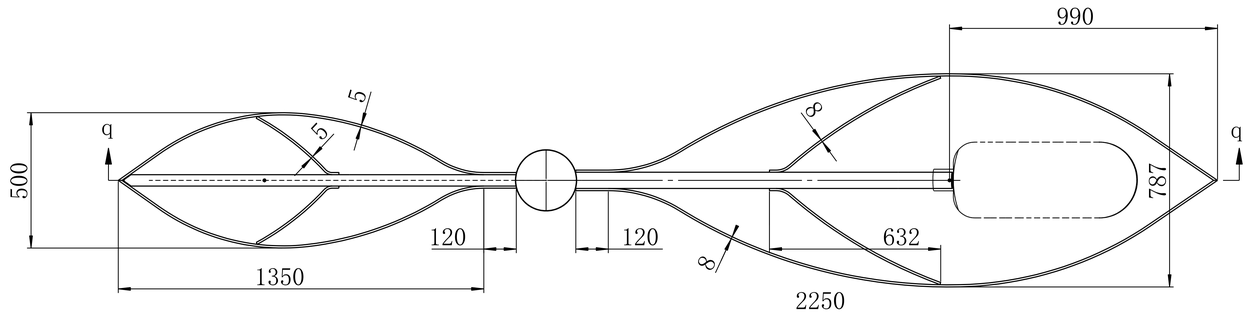

TOP VIEW

	New issue		Feb 21
REF.	REVISION	SIGNATURE	DATE

DETAILS OF TYPE SL-A BRACKET FOR PUBLIC LIGHTING COLUMN

HIGHWAYS DEPARTMENT
LIGHTING DIVISION

REFERENCE	DRAWING No.	CAD
SCALE N.T.S.	HLDSDGE07-CL0057	