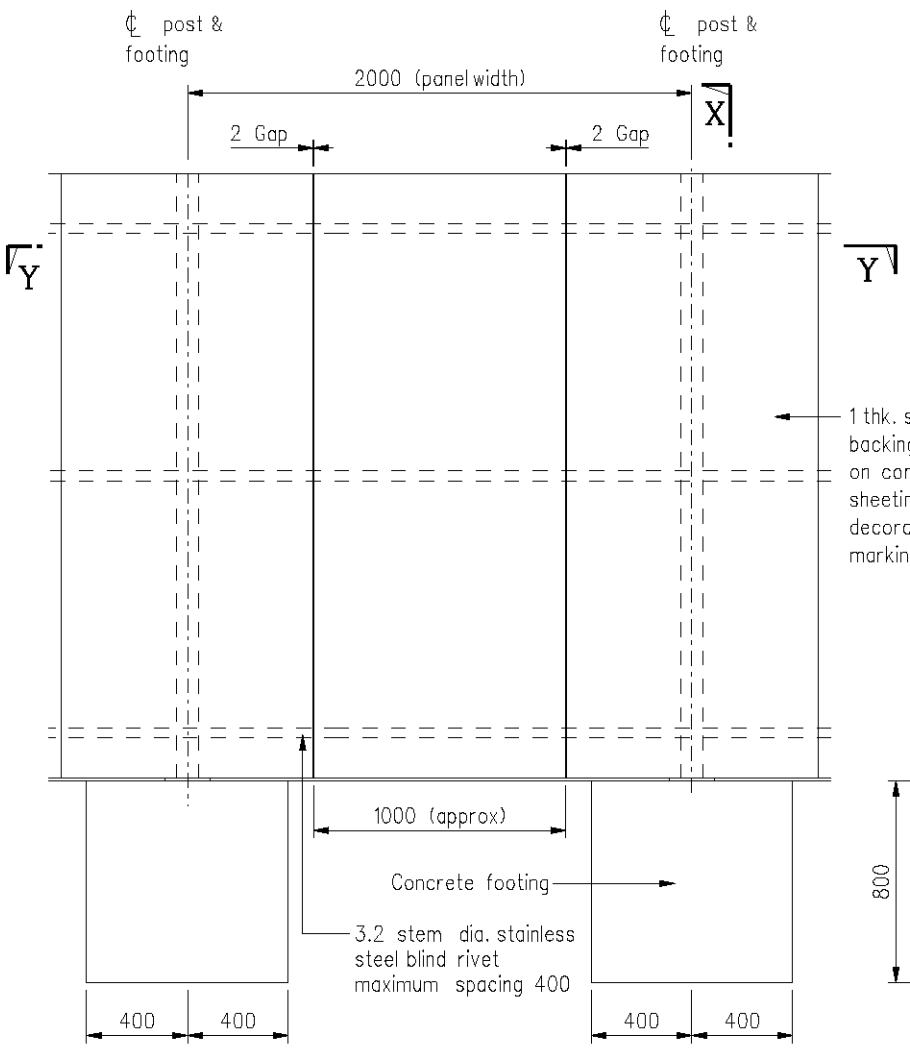

ELEVATION

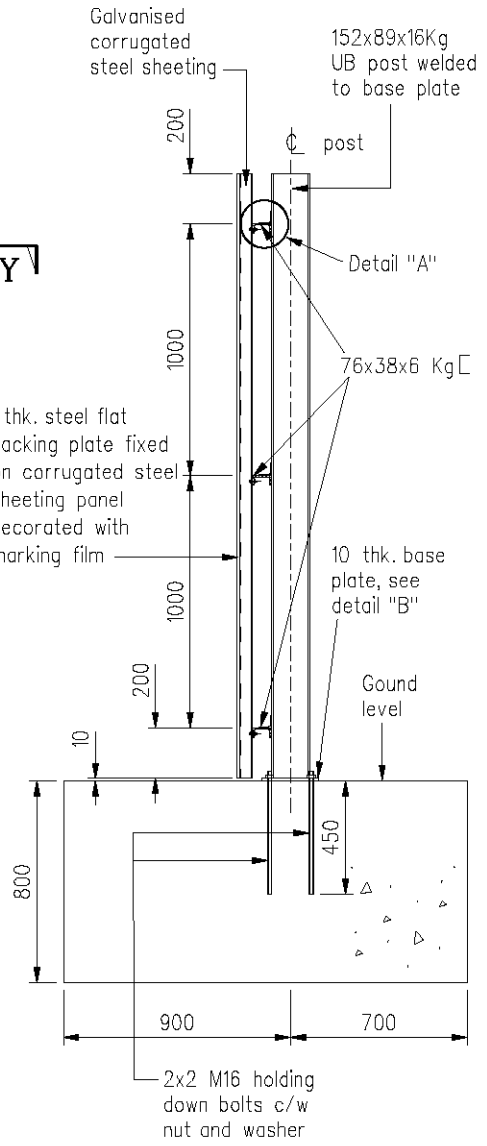

SECTION X - X

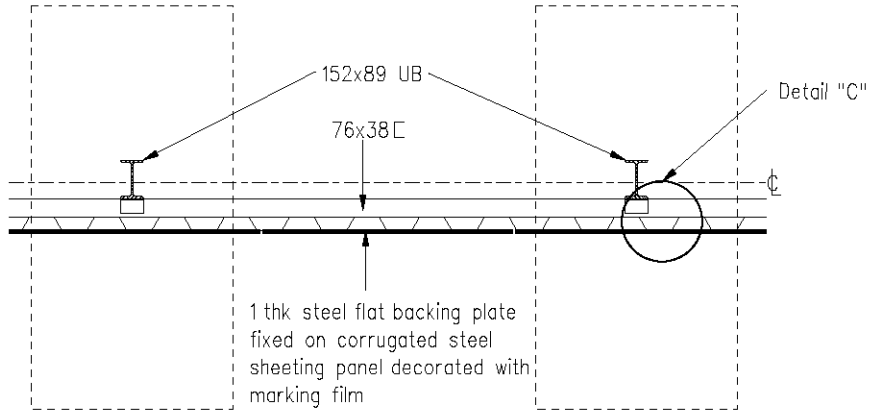

SECTION Y - Y

Notes :

1. All dimensions are in millimetres.
2. For notes, refer to the latest version of HyD Standard Drg. No. 6161.
3. Where the concrete footing is located in block paved footpath, the footing should be lowered to allow for the paving blocks and the sand course.

REF.	REVISION	SIGNATURE	DATE
	New issue		May 10

SITE HOARDINGS FOR APPLYING GRAPHIC FILM (SHEET 1 OF 2)

HIGHWAYS DEPARTMENT

REFERENCE

DRAWING No. H 6160

CAD

SCALE 1 : 30