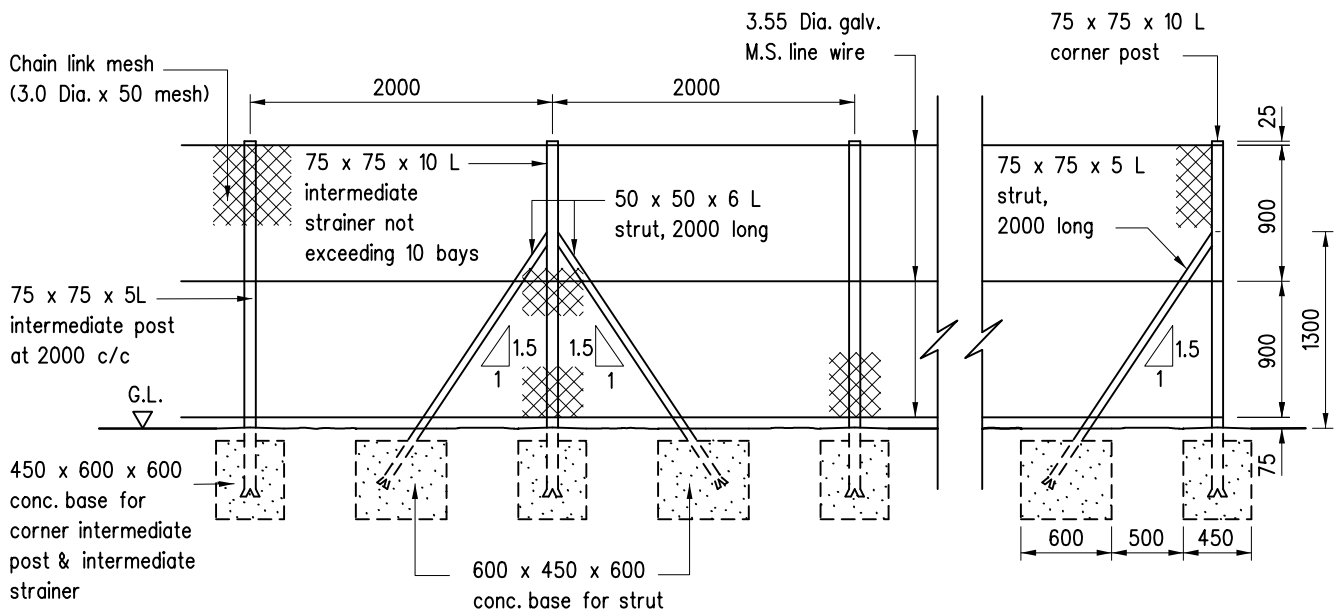

ELEVATION OF INTERMADIATE POST INTERMEDIATE STRAINER & CORNER POST

Scale 1 : 50

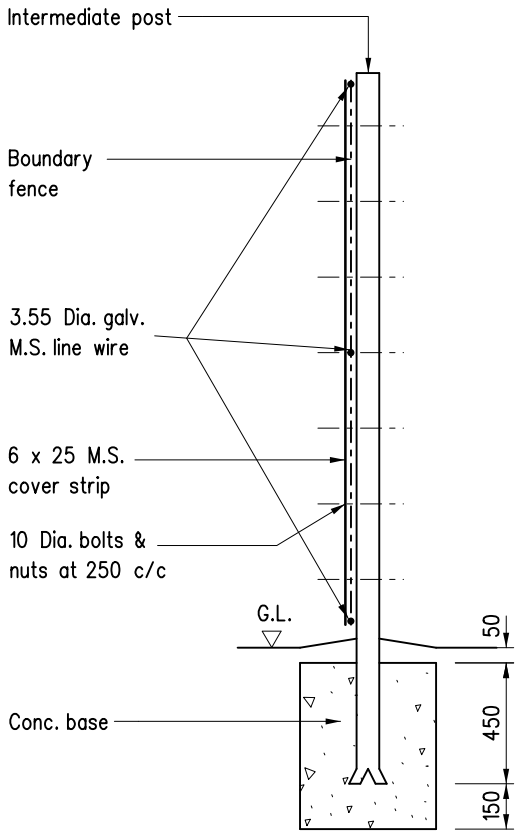

INTERMEDIATE POST

Scale 1 : 25

Notes :

1. Dimensions are in millimetres.
2. All welds to be ground smooth.
3. Steel to be Grade S275 to BS EN 10025-2.
4. All site welds to be treated with two coats of zinc rich paint before application of paint system.
5. Steel work for fencing including wires to be hot dip galvanized to BS EN ISO 1461 : 2009.
6. Chain link mesh to be zinc coated type of BS1722 Part 1.
7. Concrete to be grade 30/20.
8. Where the concrete footing is located in block paved footpath, the footing should be lowered to allow for the paving blocks and the sand course.

REF.	REVISION	SIGNATURE	DATE
C	Note 3, 5 & 6 updated		Oct 23
B	Note 5 updated		Sep 07
A	Note 8 added		Nov 99
	Former Drg. No. H6013 with general revision		Jun 94

BOUNDARY FENCE

HIGHWAYS DEPARTMENT

REFERENCE

SCALE As shown

DRAWING No. CAD

H 6120C