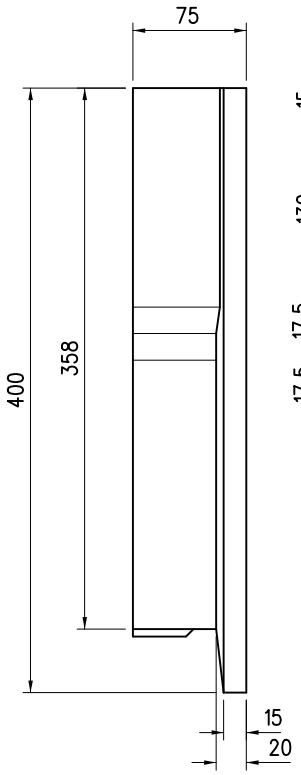

END VIEW

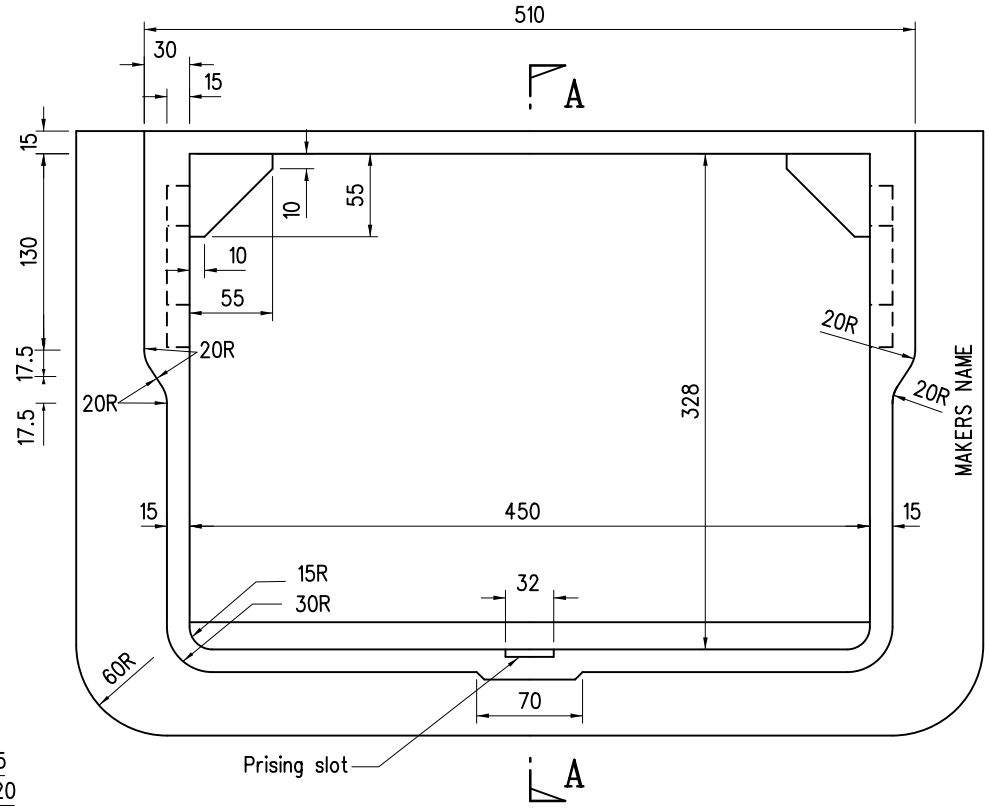

PLAN

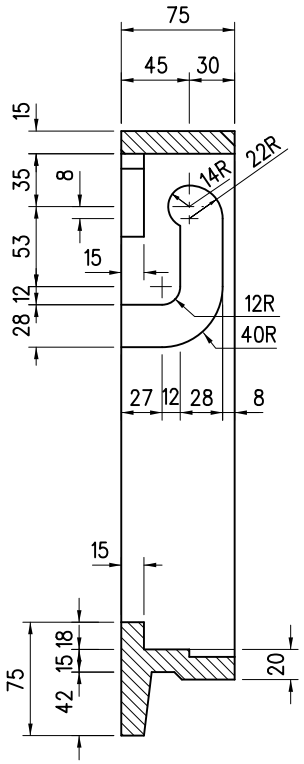

SECTION A-A

Notes:

1. Dimensions are in millimetres.
2. All corners are to be rounded to approx. 2 radius.
3. Cast iron for frames is to conform with grade EN-GJL-150 of BS EN 1561.
4. Details of grating are given in standard drg. no. H3119.

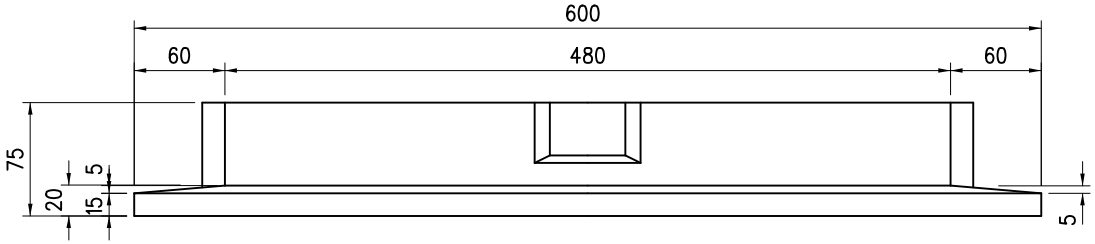

FRONT VIEW

REF.	REVISION	SIGNATURE	DATE
A	Note 3 Revised	Original signed	Nov 21
	Former drg. no. H3012/2 with general revision	-	Jun 94

HIGHWAYS DEPARTMENT

GULLY GRATING TYPE GA2-325
(SHEET 2 OF 2)

REFERENCE H.O. 7/1/6

SCALE 1 : 5

DRAWING No. H 3120A

CAD