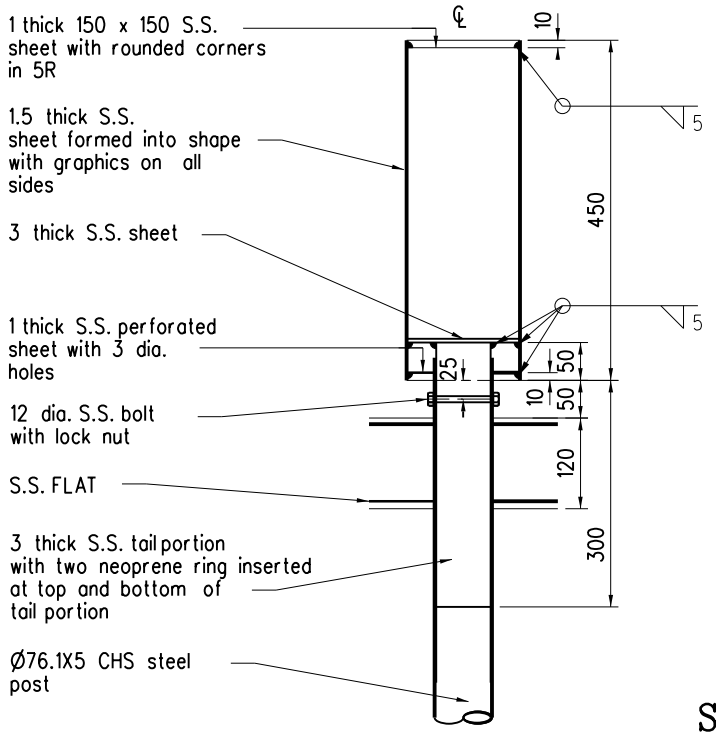

FRONT ELEVATION FOR BEACON

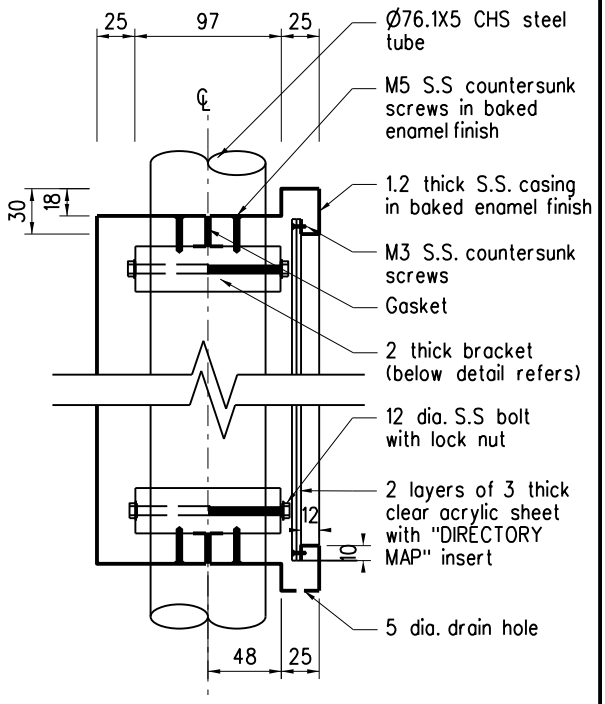

SECTIONAL VIEW FOR 1-SIDED DISPLAY PANEL

SCALE - 1:5

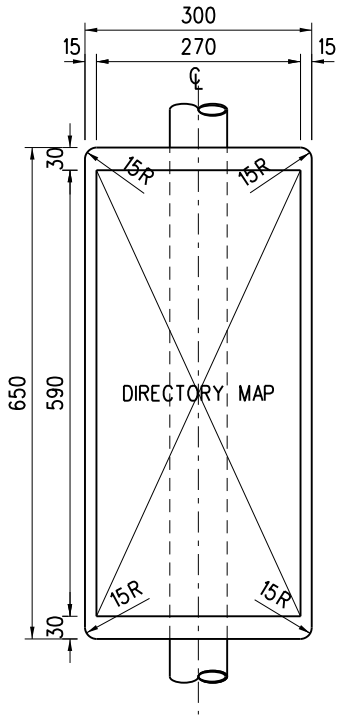

FRONT ELEVATION FOR DISPLAY PANEL

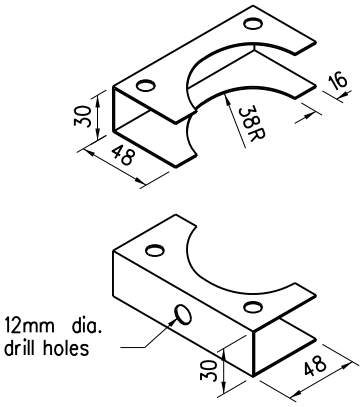

DETAILS OF BRACKET

SCALE - 1:5

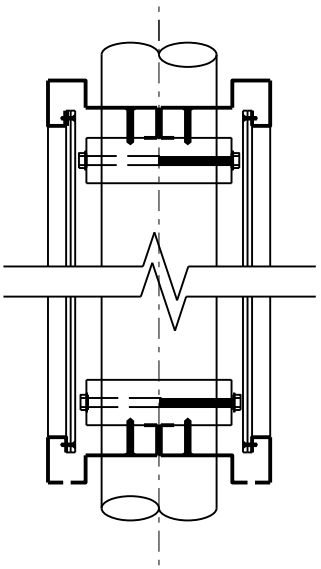

SECTIONAL VIEW FOR 2-SIDED DISPLAY PANEL

SCALE - 1:5

REF.	REVISION	SIGNATURE	DATE
	New issue	Original signed	Jan 20

DIRECTIONAL SIGNAGE FOR VISITORS (SHEET 2 OF 4)

HIGHWAYS DEPARTMENT

REFERENCE

SCALE 1 : 10 or As shown

DRAWING No. H 2302

CAD