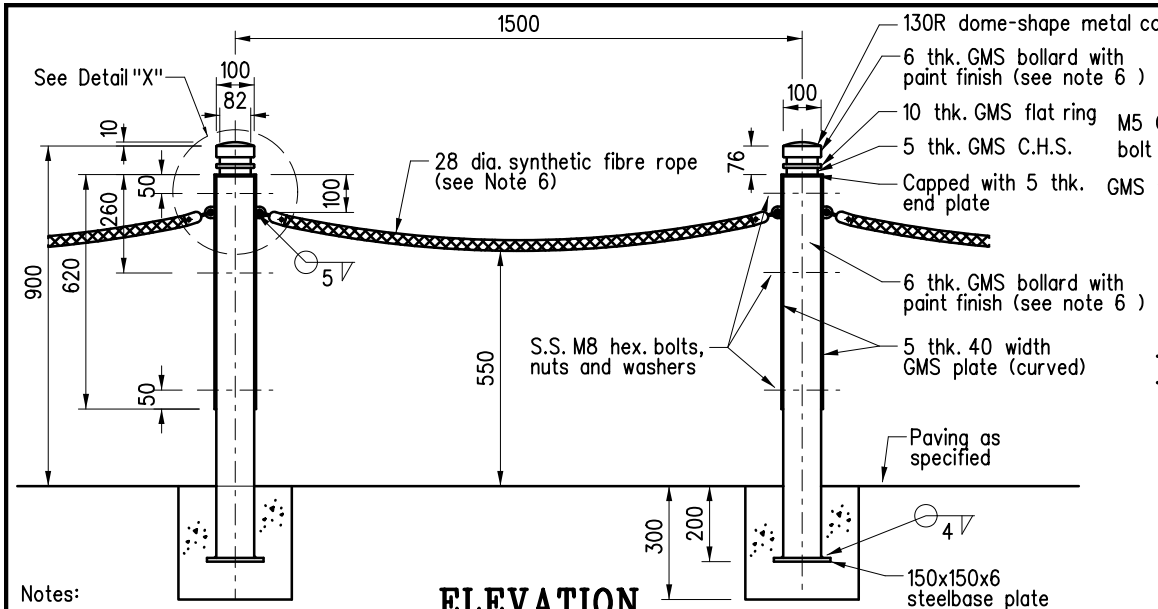

ELEVATION

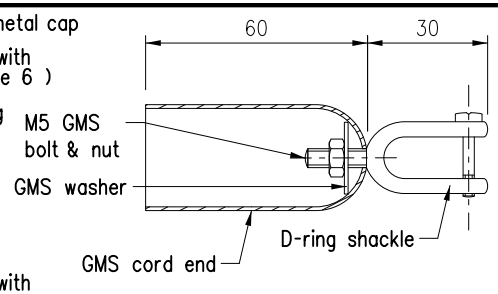

TYPICAL DETAILS OF D-RING SHACKLE AND GMS CORD END

1 : 2

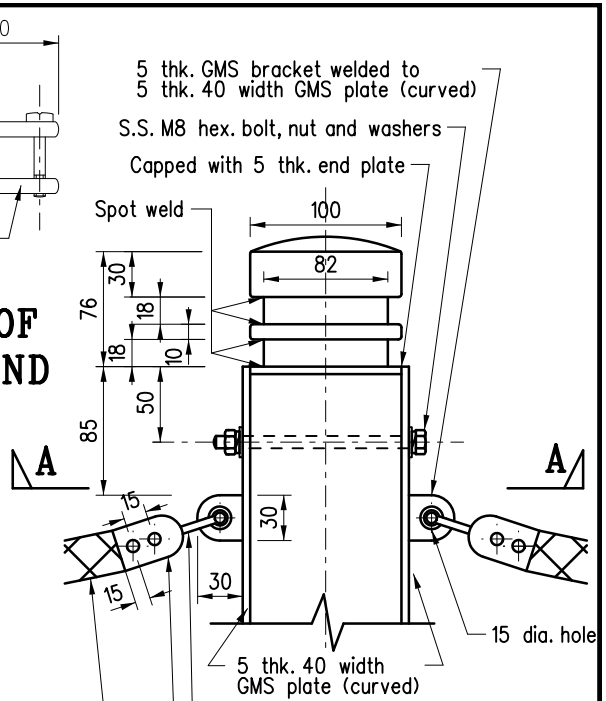

DETAIL "X"

1 : 5

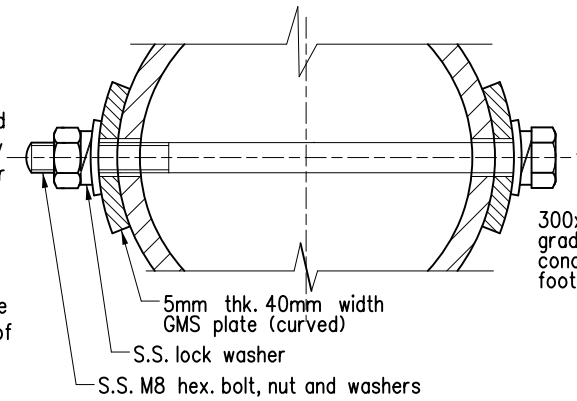

SECTION A-A

1 : 2

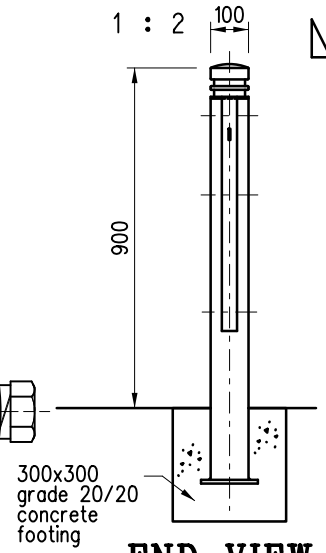

END VIEW

(without fibre rope)

Notes:

1. Dimensions are in millimetres.
2. Steel to be grade S275 of BS EN 10025-2.
3. Welds to be sound and continuous avoiding locked-in slag.
4. Welding slag to be removed immediately after welding.
5. Where the concrete footing is located in block paved footpath, the footing should be lowered to allow for the paving blocks and the sand course.
6. Colour of synthetic fiber rope to be specified by the designers and agreed by Transport Department and Highways Department. Visibility band should be provided to bollard if the proposed colour is similar with surrounding paving.
7. The synthetic fibre rope shall be polyamide or other polymer fibre material approved by the Engineer.
8. The synthetic fibre rope shall be 12-strand braided or equivalent multi-strand as approved by the Engineer. The synthetic fibre rope shall be tied by tying wire on both ends and encased in a sheath of the same material.
9. The comparative burning characteristic of the synthetic fibre rope shall be class V-0 conforming to ASTM D 3801.
10. The inner diameter of the GMS cord end shall match the diameter of the synthetic fibre rope.

REF.	REVISION	SIGNATURE	DATE
A	Note 2, Note 6 and Detail "X" updated	Original signed	Dec 25
	New Issue	-	Nov 21

TYPE 1 BOLLARD WITH SYNTHETIC FIBRE ROPE - FOR GUIDANCE PURPOSE

HIGHWAYS DEPARTMENT

REFERENCE

DRAWING No. H 2307A

CAD

SCALE 1 : 20 or as shown