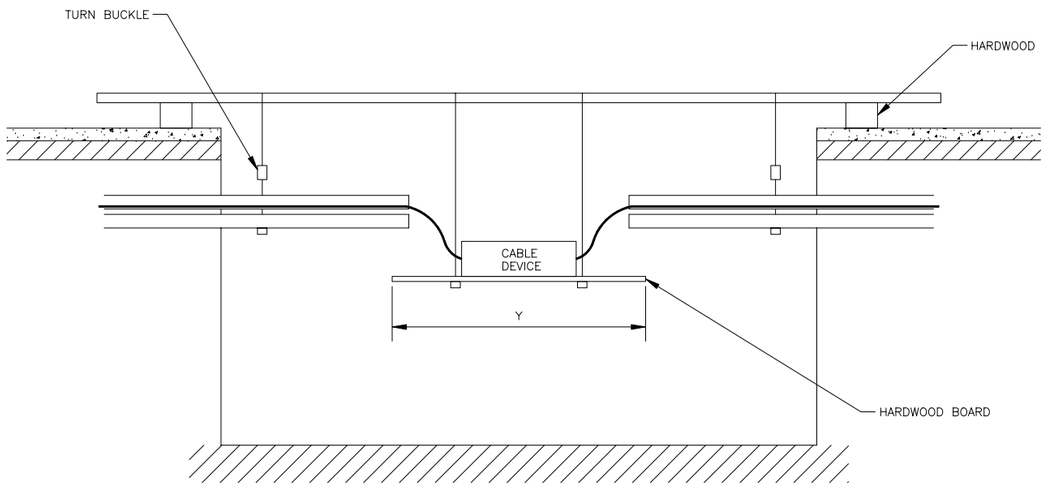

SECTION A–A

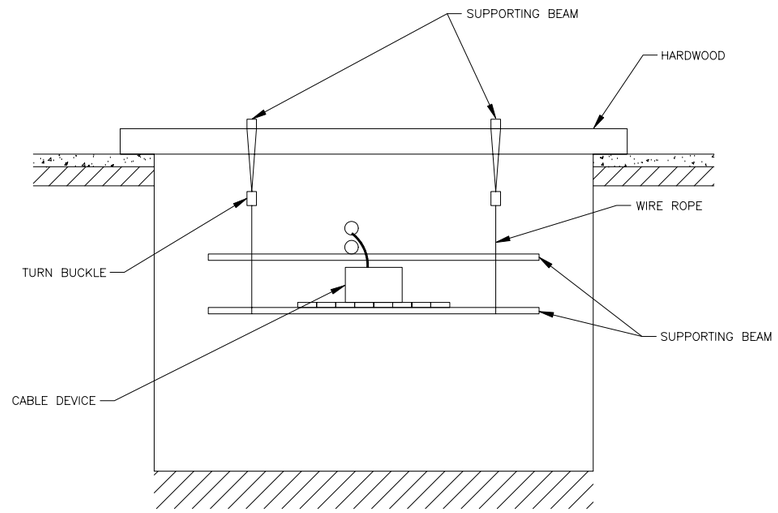

SECTION B–B

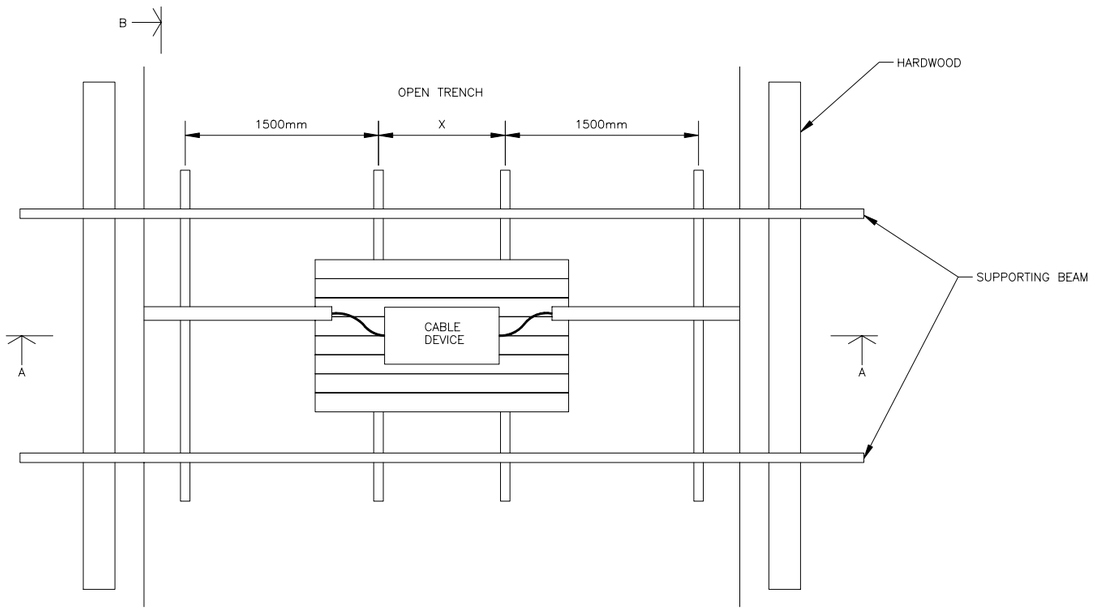

PLAN

DISTANCE		
	X	Y
JB 1	600mm	1300mm
JB 3	1000mm	2000mm
JB 7	1500mm	3200mm

NOTES:

No.	DATE	DESCRIPTION	BY

REVISIONS

DESCRIPTION:
TYPICAL SUPPORTING METHOD OF CABLE DEVICE IN OPEN TRENCH

AREA:

Designed by: DEENE CHAN	Drawn by: K. H. POON
Checked by: BRUNO HUI	Approved by: ALAN CHOI
Scale: NOT TO SCALE	Date: 15 NOVEMBER 2006
Project no:	SHEET 1 OF 1
Drawing no: TMSC03	Status: 1S / Revision:

CABLE TV 有線電視

Hong Kong Cable Television Limited
Cable TV Tower
No. 9 Hoi Shing Road
Tsuen Wan
Tel : 21126868
Fax : 21127878