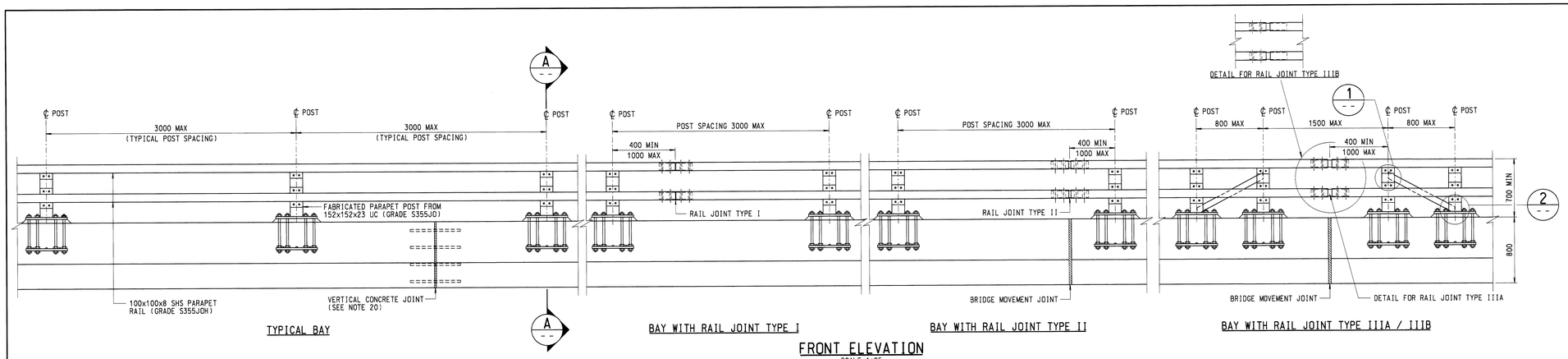

TYPICAL BAY

BAY WITH RAIL JOINT TYPE I

BAY WITH RAIL JOINT TYPE II

BAY WITH RAIL JOINT TYPE IIIA / IIIB

FRONT ELEVATION

SCALE 1:25

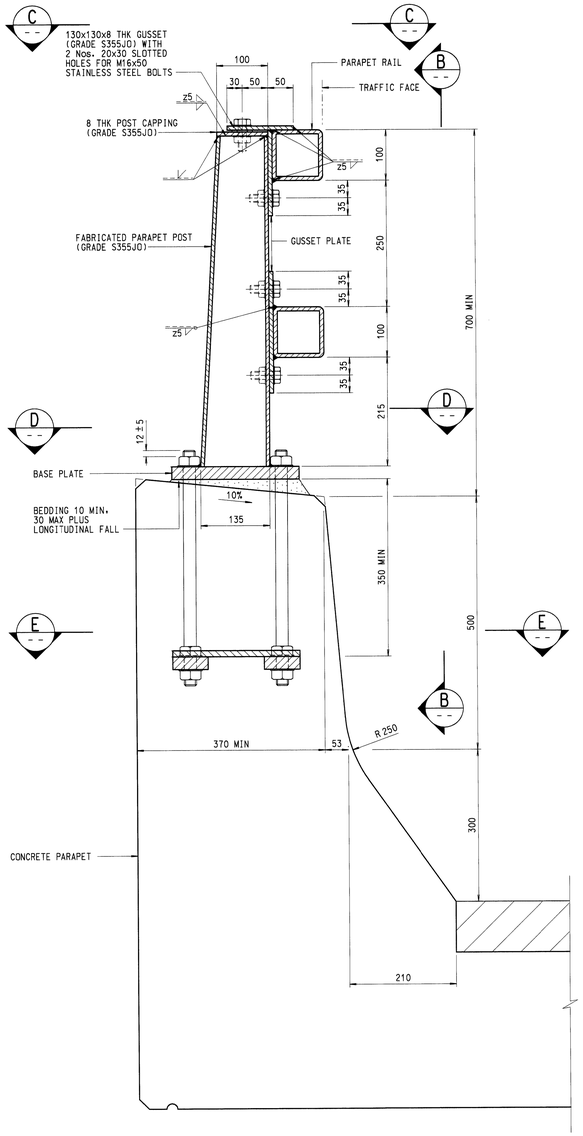

SECTION A

SCALE 1:5

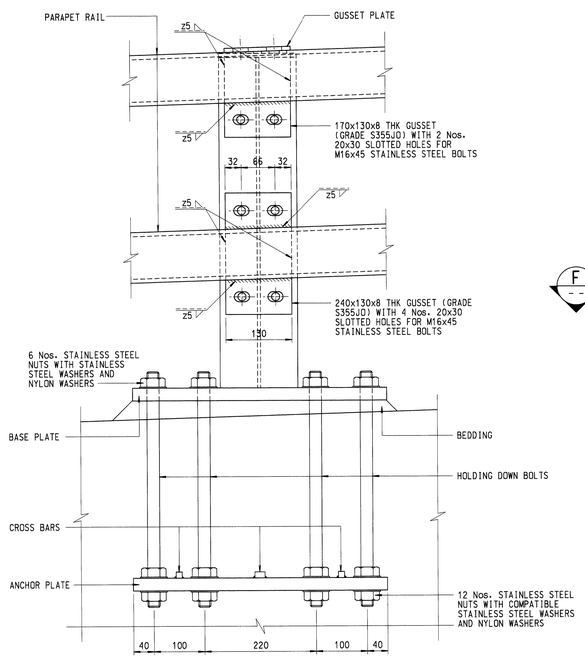

ELEVATION B

SCALE 1:5

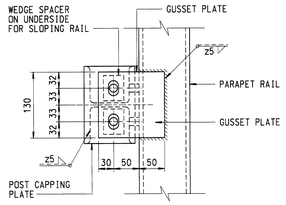

PLAN C

SCALE 1:5

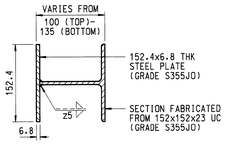

TYPICAL SECTION OF FABRICATED PARAPET POST

SCALE 1:5

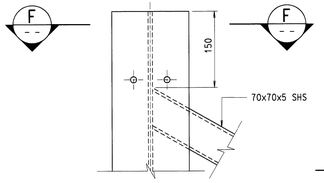

DETAIL 1

SCALE 1:5

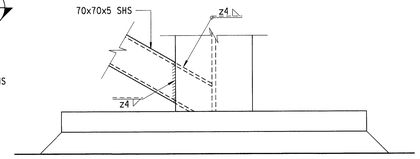

DETAIL 2

SCALE 1:5

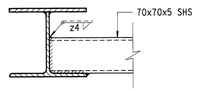

SECTION F

SCALE 1:5

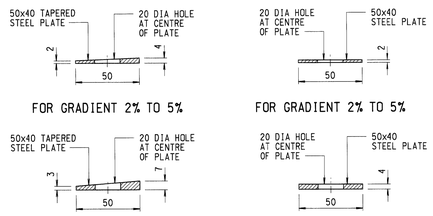

WEDGE SPACER

SCALE 1:2

FLAT SPACER

SCALE 1:2

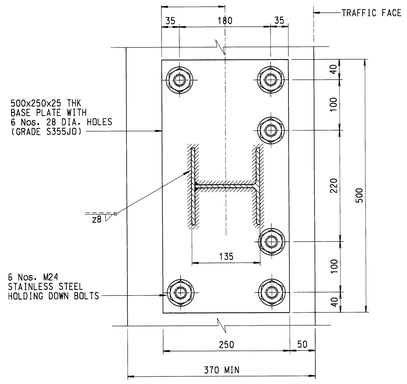

SECTION D

SCALE 1:5

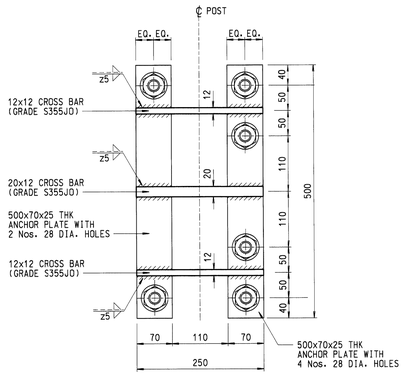

SECTION E

SCALE 1:5

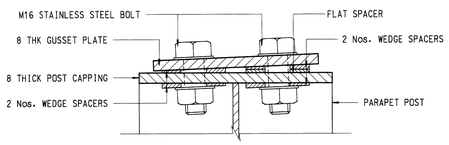

DETAIL OF SPACERS FOR SLOPING RAIL

SCALE 1:2

16. THE TRAFFIC FACE OF RAILS SHALL BE SET IN LINE WITH THE TOP EDGE OF PLINTH WITHIN THE FOLLOWING TOLERANCES:

    (i) UPPER RAIL ± 15mm
    (ii) LOWER RAIL - 15mm

    (+VE TOWARDS TRAFFIC; -VE AWAY FROM TRAFFIC)

17. ON SITE WELDING IS NOT PERMITTED UNLESS OTHERWISE AGREED BY THE ENGINEER.

18. STRENGTH OF REINFORCED CONCRETE PARAPETS:-

ITEM	CRITERION	STRENGTH
1a	MINIMUM ULTIMATE MOMENT OF RESISTANCE AGAINST VERTICAL BENDING AT BASE (REINFORCEMENT AT TRAFFIC FACE-INTERMEDIATE PANEL).	100kNm/m (INTERMEDIATE)
1b	MINIMUM ULTIMATE MOMENT OF RESISTANCE AGAINST VERTICAL BENDING AT BASE (REINFORCEMENT AT TRAFFIC FACE-END PANEL).	133kNm/m (END SECTION)
2	MINIMUM ULTIMATE MOMENT OF RESISTANCE AGAINST HORIZONTAL BENDING (REINFORCEMENT AT OUTER FACE).	50kNm/m
3	MINIMUM ULTIMATE HORIZONTAL TRANSVERSE SHEAR RESISTANCE.	220kN/m
4	MINIMUM ULTIMATE TRANSVERSE SHEAR LOAD TO BE TRANSFERRED AT CONNECTED VERTICAL JOINTS BETWEEN LENGTHS OF INSITU PARAPET OR PRECAST PANELS.	165kN

19. VERTICAL CONCRETE JOINTS SHALL BE PROVIDED IN THE CONCRETE PORTION OF THE PARAPET TO PREVENT LONGITUDINAL ACTION IN DECK STIFFENING. JOINT SPACING SHALL BE DETERMINED BY THE ENGINEER BUT SHALL NOT BE LESS THAN 3000mm.

20. CONCRETE GRADE SHALL BE 40/20.

21. STEEL REINFORCEMENT SHALL BE HIGH YIELD COMPLYING WITH CONSTRUCTION STANDARD CS2 : 1995 AND SHALL BE CUT AND BENT IN ACCORDANCE WITH BS 8666 : 2000.

22. UNLESS OTHERWISE INDICATED ON THE DRAWINGS, THE MINIMUM COVER TO ANY REINFORCEMENT SHALL BE 50mm. FULL COVER IS TO BE MAINTAINED AT GROOVES AND ANY ARCHITECTURAL FINISHES ON THE CONCRETE SURFACE.

23. TYPE OF BAR REINFORCEMENT:
    T = HOT ROLLED HIGH YIELD DEFORMED BAR OF MINIMUM YIELD STRESS 460N/mm².

    BAR SPACING INDICATED ON THE DRAWINGS SHALL BE PERPENDICULAR TO BARS, UNLESS INDICATED OTHERWISE.

24. MINIMUM ANCHORAGE AND LAP LENGTHS SHALL BE 31d AND 43d RESPECTIVELY UNLESS OTHERWISE SPECIFIED.
    (d DENOTES BAR DIAMETER)

NOTES:

1. ALL DIMENSIONS ARE IN MILLIMETRES UNLESS OTHERWISE SPECIFIED.
2. ALL STEELWORK SHALL BE HOT ROLLED / FINISHED SECTIONS COMPLYING WITH BS4, BS EN 10056 OR BS EN 10210-2 AS APPROPRIATE.
3. STEELWORK SHALL BE GRADE S355JOH TO BS EN 10025 OR GRADE S355JO TO BS EN 10210-1 OR EQUIVALENT.
4. ALL STEELWORK SHALL BE HOT DIP GALVANIZED TO BS EN ISO 1461 OR EQUIVALENT.
5. WELDING OF STEEL SHALL BE IN ACCORDANCE WITH BS EN 1011-1 AND BS EN 1011-2 AND ELECTRODES SHALL BE IN ACCORDANCE WITH BS EN 499.
6. WELDING SYMBOLS ARE IN ACCORDANCE WITH BS499.
7. WELDS ARE 6mm CONTINUOUS FILLET WELDS UNLESS OTHERWISE SPECIFIED.
8. STAINLESS STEEL BOLTS AND NUTS SHALL BE GRADE A4-80 TO BS EN ISO 3506-1 AND BS EN ISO 3506-2 WITH COMPATIBLE STAINLESS STEEL WASHERS.
9. A NYLON OR OTHER APPROVED PLASTIC WASHER SHALL BE PROVIDED AT EVERY INTERFACE BETWEEN STAINLESS STEEL AND GALVANIZED STEEL.
10. FASTENERS OTHER THAN STAINLESS STEEL MATERIALS SHALL BE CADMIUM OR ZINC ELECTROPLATED, HOT-DIP GALVANIZED, OR SHERARDISED TO THE APPROPRIATE BRITISH STANDARDS.
11. PARAPET POSTS SHALL BE FIXED VERTICALLY AND BASE PLATES SHALL BE BOLTED DOWN TIGHTLY WITH LEVELS ADJUSTED BY STEEL SHIMS.
12. RAIL EXPANSION JOINTS SHALL BE PROVIDED AT ALL STRUCTURE MOVEMENT JOINTS.
13. PARAPET RAILS SHALL BE CONTINUOUS OVER AT LEAST TWO POSTS. MAXIMUM RAIL LENGTH SHALL BE 12000.
14. BEDDING SHALL BE CEMENT / SAND GROUT WITH MIN. COMPRESSIVE STRENGTH OF 40N/mm².
15. AFTER FABRICATION, ALL STEELWORK SHALL BE PAINTED WITH THE FOLLOWING PAINT SYSTEM:

    LIFE TO FIRST MAINTENANCE : 5 - 15 YEARS, MEDIUM DURABILITY AS DEFINED IN BS EN ISO 12944 PART 5

    PRETREATMENT : TWO-PACK ETCH PRIMER.

    PRIMER : CHLORINATED RUBBER ZINC PHOSPHATE PRIMER, 70μm MINIMUM TOTAL DRY-FILM THICKNESS.

    UNDERCOAT : MICACEOUS IRON OXIDE CHLORINATED RUBBER UNDERCOAT, 100μm MINIMUM TOTAL DRY-FILM THICKNESS.

    FINISH : CHLORINATED RUBBER FINISH COAT THAT IS RESISTANT TO FISH OIL AND OTHER ANIMAL AND VEGETABLE OILS, 60μm MINIMUM TOTAL DRY-FILM THICKNESS.

no.	date	description	initial
		REVISION	

	name	signature	date
designed	K.W. MO		06/07
drawn	T.W. LAM		07/07
checked: senior technical officer	S.F. CHAN		07/07
checked: project engineer	K.W. MO		08/07
checked: senior engineer	C.K. CHAN		08/07

approved

P. K. LEE
Chief Highway Engineer

9/8/07
date

contract no.

file no.

project no.

contract

drawing title

L3 COMBINED DOUBLE RAIL CONCRETE PARAPET (TYPE PEN)

(SHEET 1 OF 2)

drawing no. SSD161(1)

scale AS SHOWN

office

BRIDGES AND STRUCTURES DIVISION
橋樑及構築部

HIGHWAYS DEPARTMENT HONG KONG
香港政府路署

B1 SIZE 1000 X 707mm

0 10 20 30 40 50 mm
1 : 1 SCALE BAR