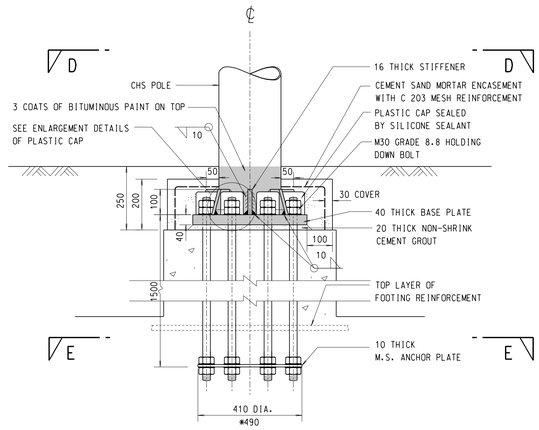

TYPICAL CONNECTION DETAILS OF POLE TO FOUNDATION

SCALE 1 : 10

(NOTE : * DIMENSIONS FOR POLE SIZE 323.9mm DIA.)

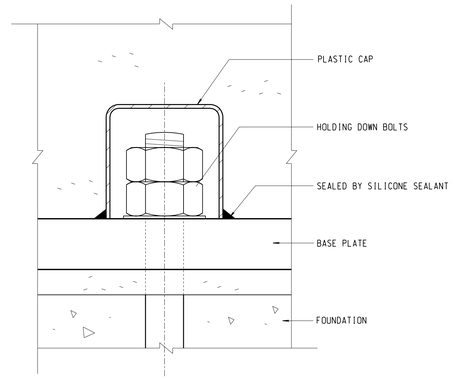

ENLARGEMENT DETAILS OF PLASTIC CAP

SCALE 1 : 2

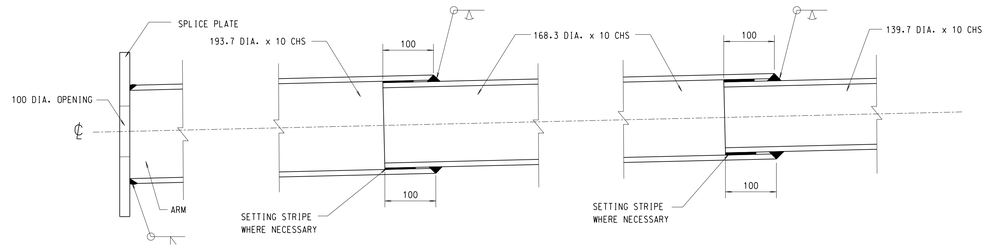

CONNECTION DETAILS OF ARM

SCALE 1 : 5

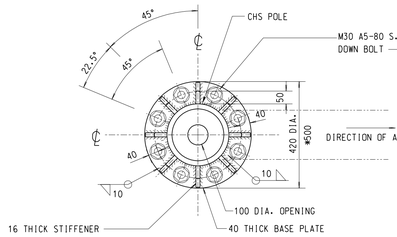

SECTION D-D

SCALE 1 : 10

(NOTE : * DIMENSIONS FOR POLE SIZE 323.9mm DIA.)

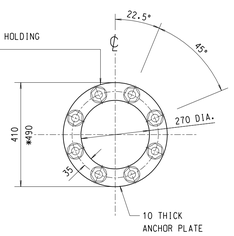

SECTION E-E

SCALE 1 : 10

(NOTE : * DIMENSIONS FOR POLE SIZE 323.9mm DIA.)

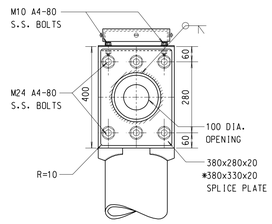

SECTION F-F

SCALE 1 : 10

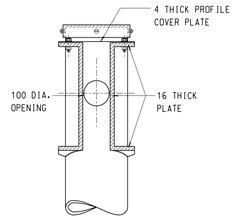

SECTION G-G

SCALE 1 : 10

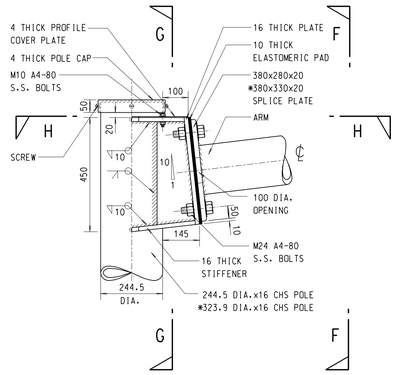

CONNECTION DETAILS OF ARM TO POLE

SCALE 1 : 10

(NOTE : * DIMENSIONS FOR POLE SIZE 323.9mm DIA.)

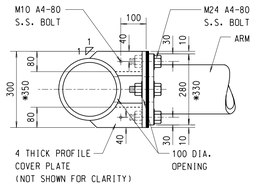

SECTION H-H

SCALE 1 : 10

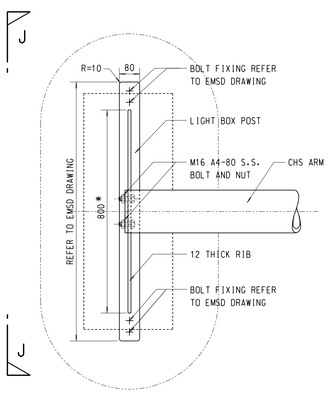

TYPICAL CONNECTION DETAILS OF TRAFFIC LIGHT & BACKING PLATE SUPPORT CONNECT TO ARM

SCALE 1 : 10

(NOTE : * TO BE ADJUSTED WITH RESPECT TO SIZE OF TRAFFIC LIGHT BOX)

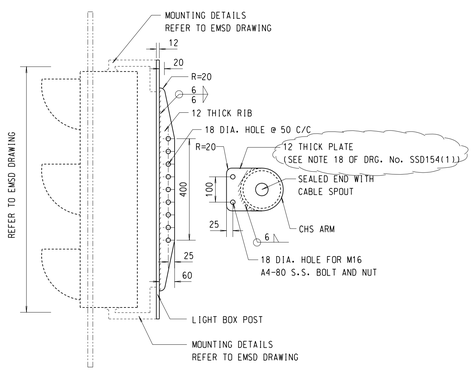

ELEVATION J-J

SCALE 1 : 10

NOTES:

1. FOR GENERAL NOTES. SEE DRG. No. SSD154(1)

no.	date	description	initial
A	04/06	NOTE ADDED TO ELEVATION H-H	SIGNED K.W. WONG.E/P1-1 SIGNED A. YUEN-SE/P1

REVISION

		name	signature	date
designed		T. CHUNG	SIGNED	JUN 02
drawn		K. L. HO	SIGNED	JUN 02
checked	senior technical officer	H. T. TANG	SIGNED	JUN 02
	project engineer	T. CHUNG	SIGNED	JUN 02
	senior engineer	W. C. LAU	SIGNED	JUN 02

approved

SIGNED — P.C. WONG, Chief Highway Engineer — 12 JUN 02 (date)

contract no.

file no.

project no.

contract

drawing title

OVERHEAD TRAFFIC LIGHT SIGNAL

(SHEET 2 OF 2)

drawing no. SSD154(2)A

scale AS SHOWN

office STRUCTURES DIVISION

HIGHWAYS DEPARTMENT HONG KONG 香港 路政署

Scale 1 : 1 — 0 10 20 30 40 50 60 70 80 90 100mm

B1 SIZE 1000 X 707mm